3. Current Electricity

1. Why do we need Electricity?

- Think about your day. You use a fridge to keep food cold, fans to stay cool, and maybe a vacuum cleaner to help with chores.
- We even see electricity in nature, like when lightning strikes or when an electric eel catches its prey.
- To make all our gadgets work, we need a steady flow of electricity.

2. Potential and Potential Difference

Before we talk about electricity, let's talk about water.

The Water Analogy:

- Imagine two bottles connected by a tube.
- If one bottle is higher than the other, water flows from the higher level to the lower level.

Electric Potential: * Just like water needs a height difference to flow, electricity needs an "electric level" difference to flow.

- This level is called Electric Potential.

Flow of Electrons: * Electrons (which make up electricity) flow from a point of lower potential to a point of higher potential.

Potential Difference (V):

- This is the difference between the electric levels of two points (let's call them A and B).
- It is what "pushes" the electrons to move.

Real-Life Example: * Think of a battery (cell). It has a positive (+) and a negative (-) terminal.

- The chemical reactions inside the cell create a "potential difference" between these two ends, which makes the electricity flow through your torch or toy.

The Formula for Potential Difference:

- $$V = \frac{W}{Q}$$
- **V:** Potential Difference (measured in Volts).
- **W:** Work done (to move the charge).
- **Q:** Total charge transferred.
- **Why use it?** We use this to calculate how much "push" or energy is needed to move electricity between two points.
- **Unit:** The unit is the Volt (V). $1 \text{ Volt} = 1 \text{ Joule} / 1 \text{ Coulomb}$.

3. Current Electricity

3. Free Electrons: The Secret Carriers

- Inside a metal wire, there are free electrons.
- These electrons are weakly attached to their atoms and can move easily from one atom to another.
- When we connect a battery, these electrons start moving in one direction, and that movement is what we call Electric Current.

4. Ohm's Law: The Golden Rule

A scientist named George Simon Ohm discovered a very important relationship between the "push" (Voltage) and the "flow" (Current).

The Law: * If the physical state of a conductor (like its length, thickness, and temperature) stays the same, the Current (I) is directly proportional to the Potential Difference (V).

The Formula:

- $$V = I \times R \quad \text{or} \quad R = \frac{V}{I}$$
- **V:** Potential Difference (Volts).
- **I:** Current (Amperes).
- **R:** Resistance (Ohms).

What is Resistance (R)?

- Imagine you are running on a road. If there are many people in your way, they slow you down.
- In a wire, moving electrons hit atoms and ions, which slows them down.
- This "hindrance" or "opposition" is called Resistance.
- **Exam Point:** The unit of Resistance is the Ohm, shown by the symbol Ω.

Real-Life Example: * A thin wire has more resistance than a thick wire, just like a narrow hallway is harder to walk through than a wide one.

5. Resistivity: A Material's Personality

Every material has its own "resistivity" (ρ). This is a specific property.

- **Copper** has very low resistivity (electricity flows easily).
- **Diamond** has very high resistivity (electricity barely flows).

Formula for Resistance based on shape:

- $$R = \rho \frac{L}{A}$$
- **L:** Length of the wire.
- **A:** Area of cross-section (thickness).

3. Current Electricity

- **ρ (rho):** Resistivity of the material.
- **Meaning:** A longer wire has more resistance ($R \propto L$), but a thicker wire has less resistance ($R \propto 1/A$).

6. Electric Circuits and Symbols

An electric circuit is a continuous path through which electricity flows. To draw them easily, we use symbols:

- **Electric Cell:** $-| |+$ (Provides the push).
- **Battery:** A collection of cells.
- **Ammeter (A):** Measures Current (always connected in series).
- **Voltmeter (V):** Measures Potential Difference (always connected in parallel).
- **Plug Key:** Turns the circuit ON or OFF.
- **Resistor:** Controls the flow of current.

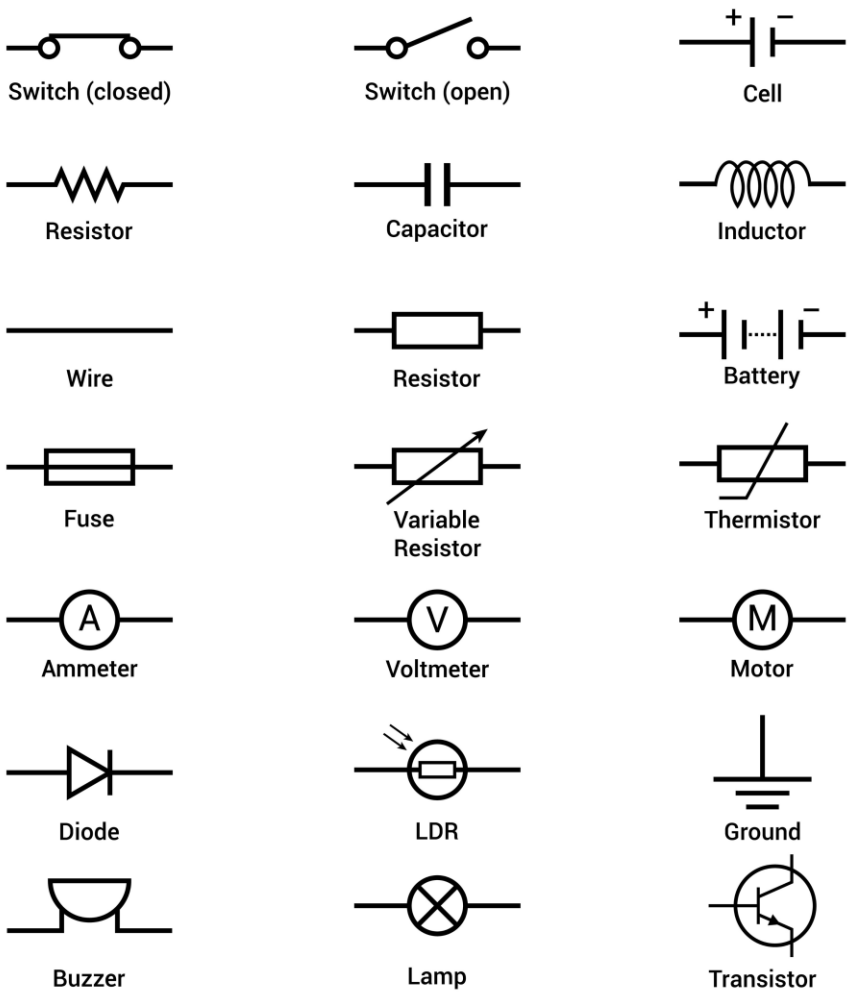

3. Current Electricity

7. Conductors and Insulators

- **Conductors:** Materials with very low resistance (like Copper, Aluminum). Electricity flows through them easily.
- **Insulators:** Materials with very high resistance (like Rubber, Wood, Plastic). Electricity cannot flow through them.
- **Real-Life Example:** Electrical wires are made of copper (conductor) but covered in plastic (insulator) so you don't get a shock.

8. Connecting Resistors: Two Ways

A. Resistors in Series (One after another)

Imagine a single-lane road. All cars must follow each other in one line.

- **Current (I):** The same current flows through every resistor.
- **Total Resistance (R_s):** $R_s = R_1 + R_2 + R_3$.
- **Key Point:** The total resistance increases. If one bulb in a series circuit breaks, the whole circuit stops working.
- **Real-Life Example:** Cheap decorative fairy lights are often in series; if one bulb blows, they all go out.

B. Resistors in Parallel (Side by side)

Imagine a highway with many lanes. Cars can choose different paths.

- **Voltage (V):** The potential difference is the same across all resistors.
- **Total Resistance (R_p):** $\frac{1}{R_p} = \frac{1}{R_1} + \frac{1}{R_2} + \frac{1}{R_3}$.
- **Key Point:** The total resistance decreases. If one appliance breaks, the others keep working.
- **Real-Life Example:** Your home wiring is in parallel. You can turn off the fan without the lights going off.

9. Domestic Electricity & Safety

In India, electricity is brought to our homes at 220V. We use three wires:

1. **Live Wire (Red/Brown):** Carries the current.
2. **Neutral Wire (Blue/Black):** Completes the circuit.
3. **Earth Wire (Yellow/Green):** Connected to a metal plate deep underground for safety.

Fuse Wire:

- A fuse is a small safety wire with a low melting point.
- If too much current flows, the fuse melts and breaks the circuit, protecting your expensive TV or Fridge from burning.

3. Current Electricity

Teacher's Safety Precautions:

- Always keep your hands dry when touching switches.
- Wear rubber-soled shoes because rubber is an insulator.
- If someone gets a shock, don't touch them! Use a wooden pole to push them away.

Summary of the Chapter

- Electricity flows because of a potential difference.
- Ohm's Law ($V=IR$) connects Voltage, Current, and Resistance.
- Resistance depends on the material, its length, and its thickness.
- Series connections increase resistance; Parallel connections decrease it.
- Safety is vital; use fuses and earthing to stay safe.

Key Terms & Meanings

- **Electric Potential:** The level of electric energy at a point.
- **Potential Difference:** The work done to move a unit charge from one point to another.
- **Resistance:** The opposition to the flow of current.
- **Resistivity:** A specific property of a material that determines its resistance.
- **Ammeter:** A device used to measure electric current.
- **Voltmeter:** A device used to measure potential difference.

Exam-Oriented Questions & Answers

Q1. State Ohm's Law.

- **Ans:** Ohm's law states that if the physical state of a conductor remains constant, the current (I) flowing through it is directly proportional to the potential difference (V) between its two ends ($V = IR$).

Q2. Why is home wiring done in parallel and not in series?

- **Ans:** In parallel, the potential difference is the same for all appliances, and if one appliance fails, the others continue to work. In series, if one component fails, the entire circuit breaks.

Q3. What is a fuse wire used for?

- **Ans:** A fuse wire protects domestic appliances. It has a low melting point; if the current becomes too high, it melts and breaks the circuit, stopping the flow of electricity.

Q4. A resistance of 1000Ω is connected to a 230 V source. How much current flows through it?

3. Current Electricity

- **Ans:** Using $I = V / R$: $I = 230 / 1000 = 0.23 \text{ Amperes}$.

Q5. What are the colors of the Live, Neutral, and Earth wires?

- **Ans:** Live is Red or Brown, Neutral is Blue or Black, and Earth is Yellow or Green.

Q6. If three resistors of $15 \Omega, 3 \Omega$, and 4Ω are connected in series, what is the effective resistance?

- **Ans:** For series, $R_s = R_1 + R_2 + R_3$. $R_s = 15 + 3 + 4 = 22 \Omega$.

3. Current Electricity

- Current Electricity
  - Potential and Potential Difference
    - Electric Potential
    - Potential Difference of a Cell
    - Formula: $V = W/Q$
    - SI Unit: Volt (V)
  - Conductors and Insulators
    - Conductors: Low Resistance
    - Insulators: High Resistance
    - Free Electrons in Metals
  - Ohm's Law
    - Relationship: $V = IR$
    - Physical State Constant
    - SI Unit of Resistance: Ohm (Ω)
  - Resistance and Resistivity
    - Factors: Length, Area, Material
    - Resistivity Formula: $R = \rho(L/A)$
    - SI Unit: Ohm metre (Ωm)
  - Electric Circuit
    - Components: Cell, Battery, Switch
    - Measuring Instruments: Ammeter, Voltmeter
    - Circuit Symbols
  - Connection of Resistors
    - Resistors in Series
      - Formula: $R_s = R_1 + R_2 + R_3$
      - Same Current Flow
    - Resistors in Parallel
      - Formula: $1/R_p = 1/R_1 + 1/R_2 + 1/R_3$
      - Same Potential Difference
  - Domestic Electricity
    - Wires: Live, Neutral, Earth
    - Safety Device: Fuse Wire
    - Precautions and Safety